P-Channel MOSFET
-20V -1.5A 1.25W SOT-23

MFT2P1A5S23E

MERITEK

FEATURE

- $R_{DS(ON)}$<325mΩ, V_{GS}=-4.5V, I_D=-1.5A
- $R_{DS(ON)}$<420mΩ, V_{GS}=-2.5V, I_D=-1.2A
- $R_{DS(ON)}$<600mΩ, V_{GS}=-1.8V, I_D=-0.5A
- Application: Switch Load, PWM Application
- ESD Protected 2KV HBM

MECHANICAL DATA

- Case: SOT-23 Package
- Terminals: Solderable per MIL-STD-750, Method 2026

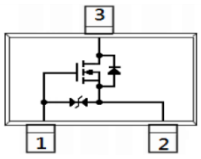

RoHS

MAXIMUM RATINGS

Parameter		Symbol	Value	Unit
Drain-Source Voltage		V_{DS}	-20	V
Gate-Source Voltage		V_{GS}	±8	V
Drain Current – Continuous		I_D	-1.5	A
Drain Current – Pulsed		I_{DM}	-4	A
Power Dissipation	T_A=25°C	P_D	1.25	W
	Derate above 25°C		10	mW/°C
Thermal Resistance Junction to Ambient		$R_{\theta JA}$	100	°C/W
Operating Junction and Storage Temperature		T_J, T_{STG}	-55 to 150	°C

DIMENSIONS

Item	Min (mm)	Max (mm)
A1	--	0.10
A2	0.79	1.30
b	0.30	0.50
C	0.08	0.20
D	2.70	3.10
e	0.89	1.02
e1	1.78	2.04
E	2.10	2.80
E1	1.20	1.60
L	0.15	--
X	0.66	
X1	0.65	
Y	0.99	
Y1	0.86	
Y2	1.85	

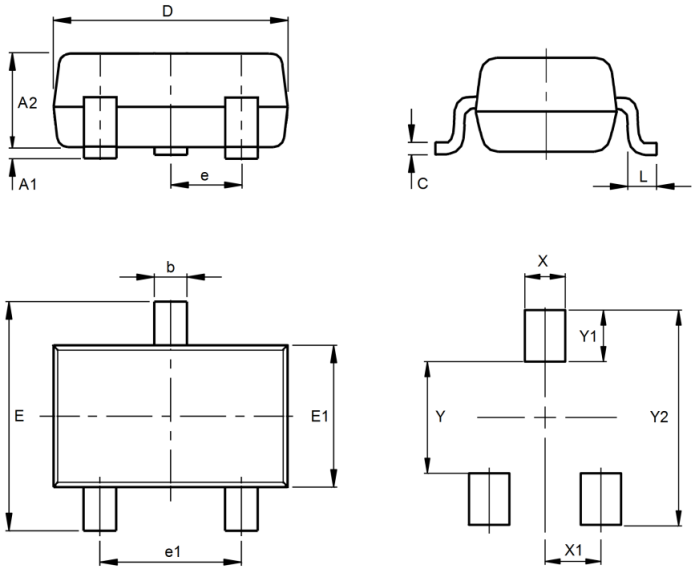

ELECTRICAL CHARACTERISTICS

Off Characteristics	Conditions	Symbol	Min	Typ.	Max	Unit
Drain-Source Breakdown Voltage	V_{GS}=0V, I_D=-250μA	BV_{DSS}	-20	--	--	V
Drain-Source Leakage Current	V_{DS}=-20V, V_{GS}=0V	I_{DSS}	--	-0.02	-1	μA
Gate-Source Leakage Current	V_{GS}=±8V, V_{DS}=0V	I_{GSS}	--	±3.5	±10	μA
On Characteristics	**Conditions**	**Symbol**	**Min**	**Typ.**	**Max**	**Unit**
Static Drain-Source On-Resistance	V_{GS}=-4.5V, I_D=-1.5A	$R_{DS(ON)}$	--	240	325	mΩ
	V_{GS}=-2.5V, I_D=-1.2A		--	295	420	mΩ
	V_{GS}=-1.8V, I_D=-0.5A		--	405	600	mΩ
Gate Threshold Voltage	V_{GS}=V_{DS}, I_D=-250μA	$V_{GS(th)}$	-0.5	-0.64	-1.0	V
Dynamic Characteristics	**Conditions**	**Symbol**	**Min**	**Typ.**	**Max**	**Unit**
Total Gate Charge	V_{DS}=-10V, V_{GS}=-10V, I_D=-1.5A	Q_g	--	1.7	--	nC
Gate-Source Charge		Q_{gs}	--	0.35	--	nC
Gate-Drain Charge		Q_{gd}	--	0.43	--	nC
Turn-On Delay Time	V_{DD}=-10V, V_{GS}=-4.5V, R_G=6Ω I_D=-1.5A	$T_{d(on)}$	--	11	--	ns
Rise Time		T_r	--	38	--	ns
Turn-Off Delay Time		$T_{d(off)}$	--	130	--	ns
Fall Time		T_f	--	75	--	ns
Input Capacitance	V_{DS}=-10V, V_{GS}=0V, F=1MHz	C_{iss}	--	165	--	pF
Output Capacitance		C_{oss}	--	25	--	pF
Reverse Transfer Capacitance		C_{rss}	--	14.7	--	pF
Drain-Source Body Diode	**Conditions**	**Symbol**	**Min**	**Typ.**	**Max**	**Unit**
Continuous Source Current	V_G=V_D=0V, Force Current	I_S	--	--	-1.6	A
Diode Forward Voltage	V_{GS}=0V, I_S=-1.6A	V_{SD}	--	-1.03	-1.2	V

Note:
1. Pulse width≤300us, Duty cycle≤2%
2. Essentially independent of operating temperature typical characteristics.
3. Maximum current rating is package limited.
4. $R_{\theta JA}$ is the sum of the junction-to-case and case-to-ambient thermal resistance where the case thermal reference is defined as the solder mounting surface of the drain pins.Mounted on a 1 $inch^2$ with 2oz square pad of copper.

Switching Time Waveform

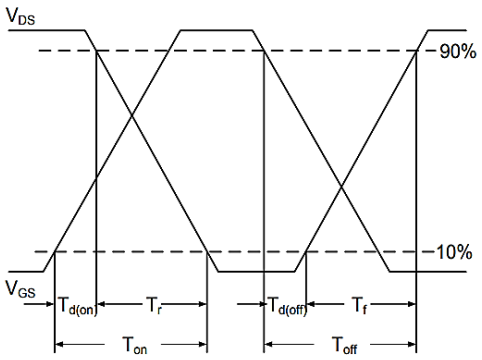

Switching Test Circuit

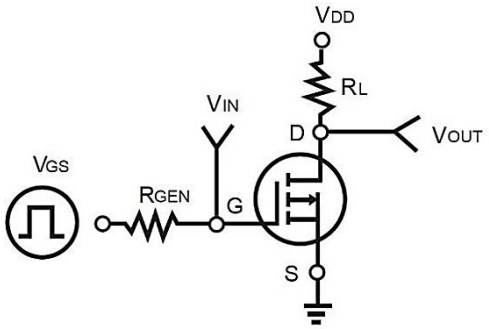

CHARACTERISTIC CURVES

On-Region Characteristics

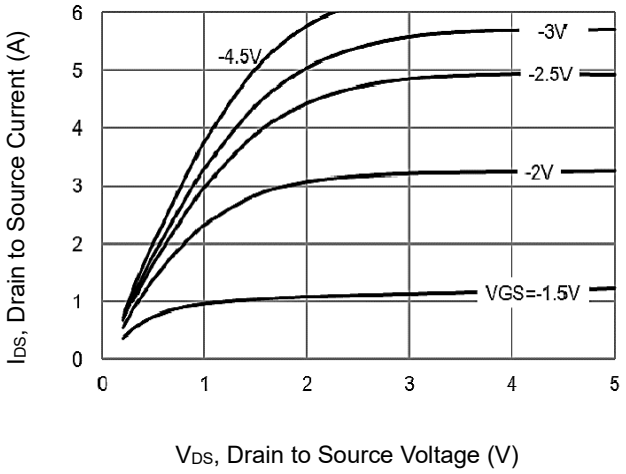

Transfer Characteristics

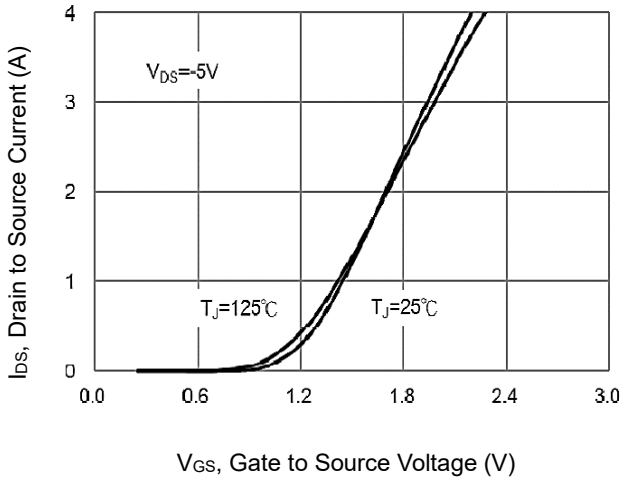

On-Resistance vs. Drain Current

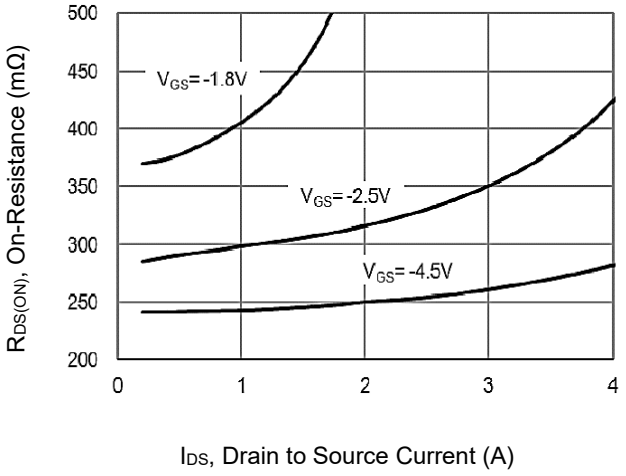

On-Resistance vs. Junction Temperature

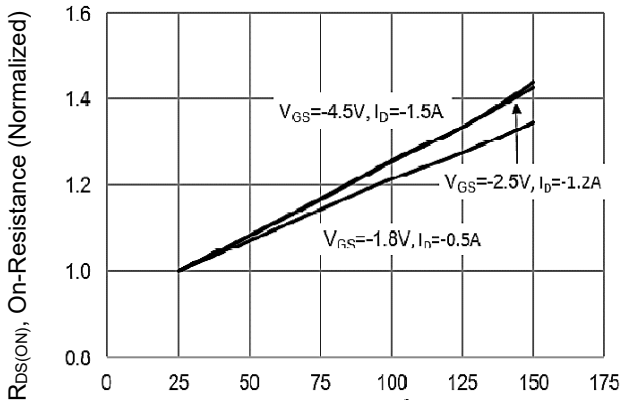

On-Resistance Variation with V_{GS}

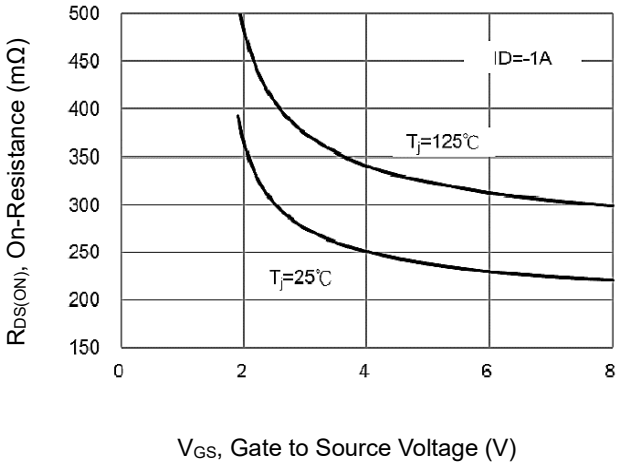

Bode Diode Characteristics

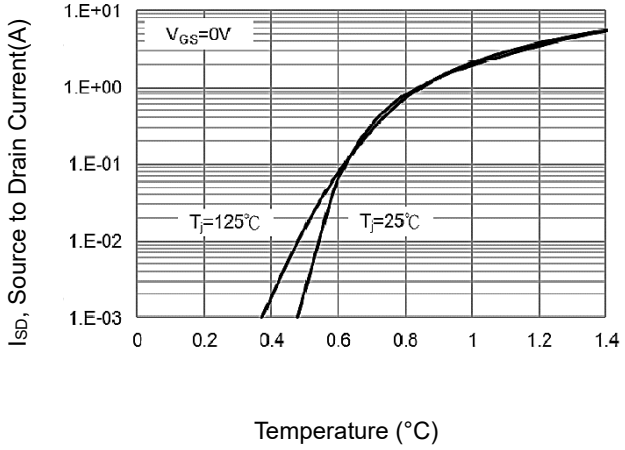

CHARACTERISTICS CURVES

Gate-Charge Characteristics

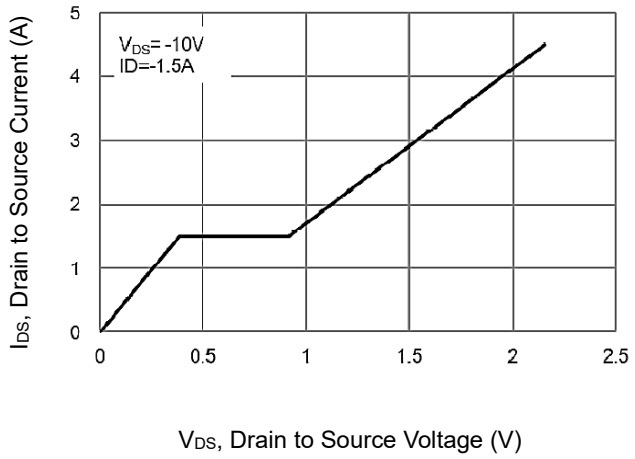

Threshold Voltage Variation with Temperature

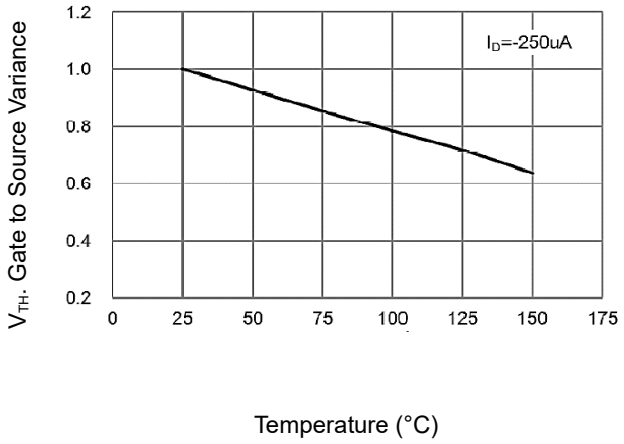

Capacitance vs. Drain to Source Voltage