N-Channel MOSFET AEC-Q101
20V 6.5A 1.25W SOT-23 ESD

MFT2N6A5S23EA

MERITEK

FEATURE

- $R_{DS(ON)}$ <22mΩ, V_{GS}=4.5V, I_D=6.5A
- $R_{DS(ON)}$ <26mΩ, V_{GS}=2.5V, I_D=5.5A
- $R_{DS(ON)}$ <34mΩ, V_{GS}=1.8V, I_D=5A
- Advanced Trench Process Technology
- ESD Protected 2KV HBM
- AEC-Q101 Qualified

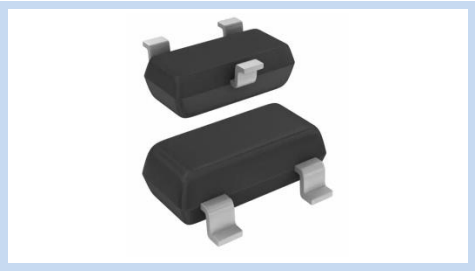

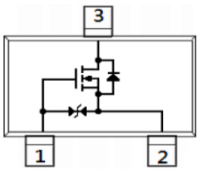

RoHS

MECHANICAL DATA

- Case: SOT-23 Package
- Terminals: Solderable per MIL-STD-750, Method 2026

MAXIMUM RATINGS

Parameter		Symbol	Value	Unit
Drain-Source Voltage		V_{DS}	20	V
Gate-Source Voltage		V_{GS}	±8	V
Drain Current – Continuous		I_D	6.5	A
Drain Current – Pulsed		I_{DM}	32	A
Power Dissipation	T_a=25°C	P_D	1.25	W
	Derate above 25°C		10	mW/°C
Thermal Resistance, Junction-to-Ambient		$R_{\theta JA}$	100	°C/W
Operating Junction Temperature Range		T_J,T_{stg}	-55 to 150	°C

DIMENSIONS

Item	Min (mm)	Max (mm)
A1	0.00	0.10
A2	0.90	1.10
b	0.35	0.50
C	0.08	0.20
D	2.80	3.04
e	0.90	1.10
e1	1.20	1.40
E	2.20	2.60
E1	1.20	1.40
L	0.15	
X	0.80	
X1	0.95	
Y	1.10	
Y1	0.90	
Y2	2.70	

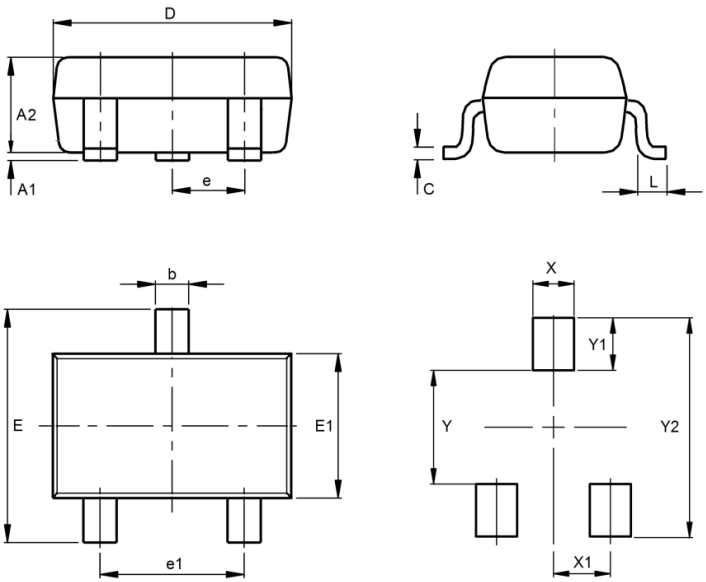

ELECTRICAL CHARACTERISTICS

Off Characteristics	Conditions	Symbol	Min	Typ.	Max	Unit
Drain-Source Breakdown Voltage	V_{GS}=0V, I_D= 250uA	BV_{DSS}	20.0	-	-	V
Zero Gate Voltage Drain Current	V_{DS}= 20V, V_{GS}=0V	I_{DSS}	-	-	1.0	μA
Gate Leakage Current	V_{DS}=0V, V_{GS}=±8V	I_{GSS}	-	-	±10.0	μA
On Characteristics	**Conditions**	**Symbol**	**Min**	**Typ.**	**Max**	**Unit**
Gate Threshold Voltage	V_{GS}=V_{DS}, I_D= 250uA	$V_{GS(th)}$	0.4	0.58	1.0	V
Drain-Source On-Resistance	V_{GS}=4.5V, I_D=6.5A	$R_{DS(ON)}$	-	18.4	22.0	mΩ
	V_{GS}= 2.5V, I_D= 5.5A		-	21.5	26.0	mΩ
	V_{GS}= 1.8V, I_D= 5A		-	26.4	34.0	mΩ
Dynamic Characteristics	**Conditions**	**Symbol**	**Min**	**Typ.**	**Max**	**Unit**
Total Gate Charge	V_{DS}= 10V, I_D= 6.5A V_{GS}= 4.5V	Q_g	-	8.60	-	nC
Gate-Source Charge		Q_{gs}	-	1.06	-	nC
Gate-Drain Charge		Q_{gd}	-	1.04	-	nC
Input Capacitance	V_{DS}= 10V, V_{GS}=0V, F=1.0MHz	C_{iss}	-	836	-	pF
Output Capacitance		C_{oss}	-	96	-	pF
Reverse Transfer Capacitance		C_{rss}	-	80	-	pF
Turn-On Delay Time	V_{DD}= 10V, I_D= 1A V_{GS}=4.5V R_G= 3Ω	$T_{d(on)}$	-	24	-	nS
Rise Time		T_r	-	46	-	nS
Turn-Off Delay Time		$T_{d(off)}$	-	0.22	-	uS
Fall Time		T_f	-	0.30	-	uS
Drain-Source Body Diode	**Conditions**	**Symbol**	**Min**	**Typ.**	**Max**	**Unit**
Diode Forward Current	-	I_S	-	-	1.5	A
Diode Forward Voltage	I_S=1A, V_{GS}=0V	V_{SD}	-	0.74	1.0	V

Note:
1. Pulse width ≤300μs, duty cycle ≤2%
2. Essentially independent of operating temperature typical characteristics.
3. $R_{\theta JA}$ is the sum of the junction-to-case and case-to-ambient thermal resistance where the case thermal reference is defined as the solder mounting surface of the drain pins mounted on a 1-inch FR-4 with 2oz. square pad of copper.
4. The maximum current rating is package limited.
5. Guaranteed by design, not subject to production testing.

Switching Time Waveform

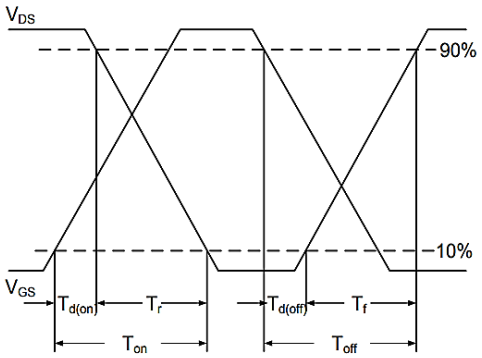

Switching Test Circuit

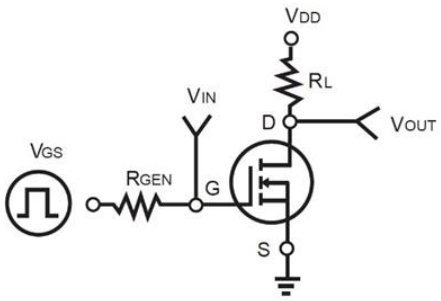

CHARACTERISTIC CURVES

On-Region Characteristics

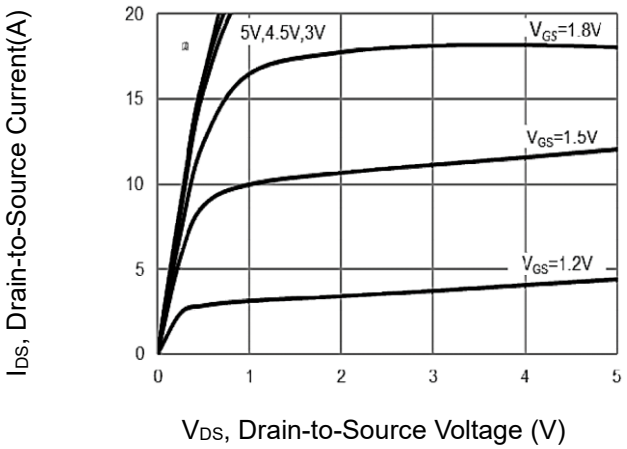

Transfer Characteristics

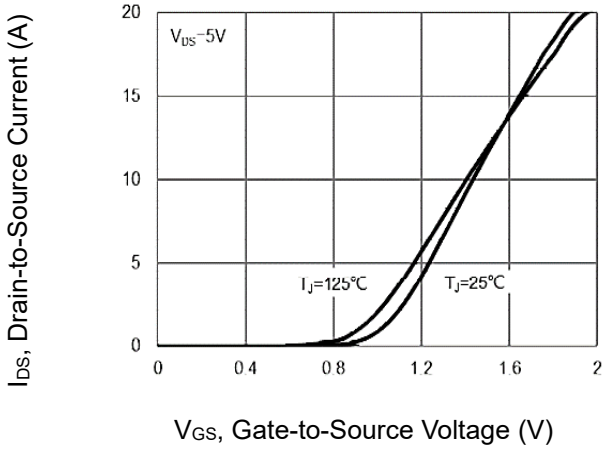

On-Resistance vs. Drain Current

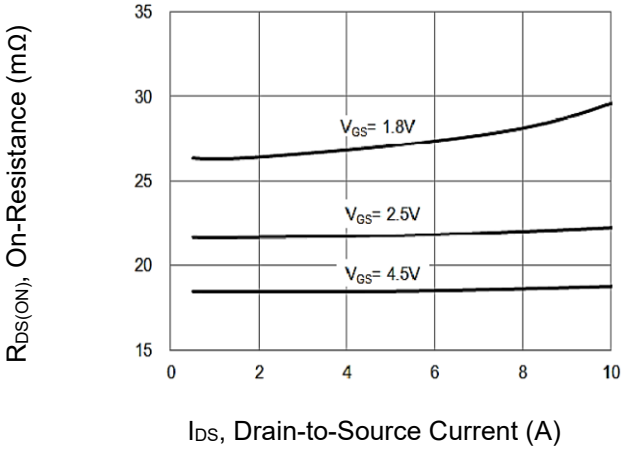

On-Resistance vs. Junction temperature

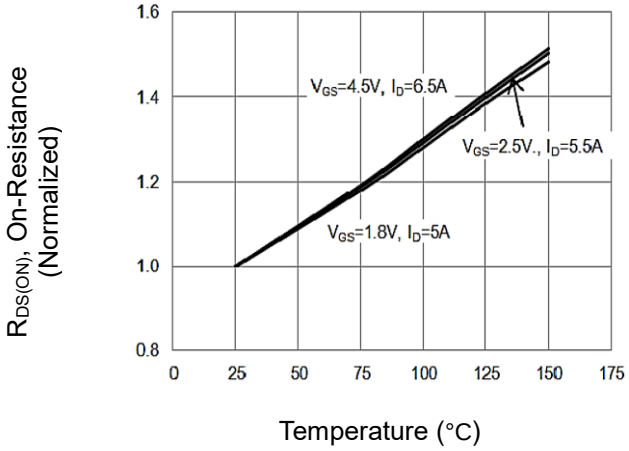

On-Resistance Variation with VGS

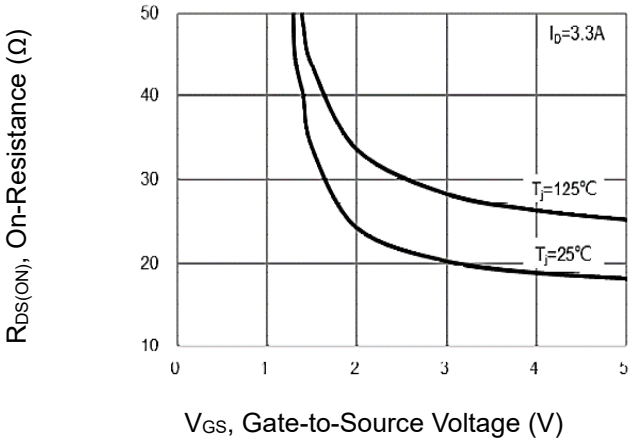

Body Diode Characteristics

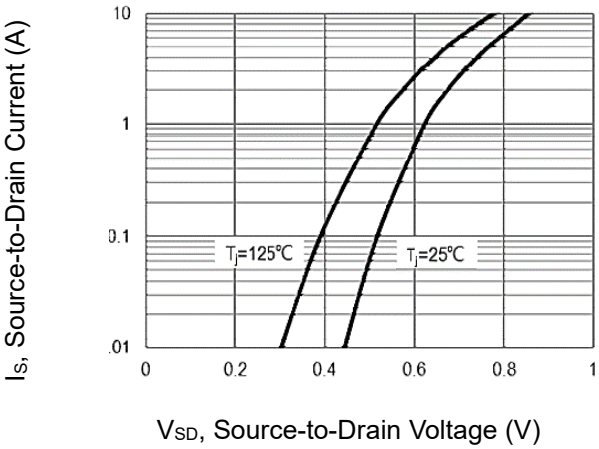

CHARACTERISTIC CURVES

Gate-Charge Characteristics

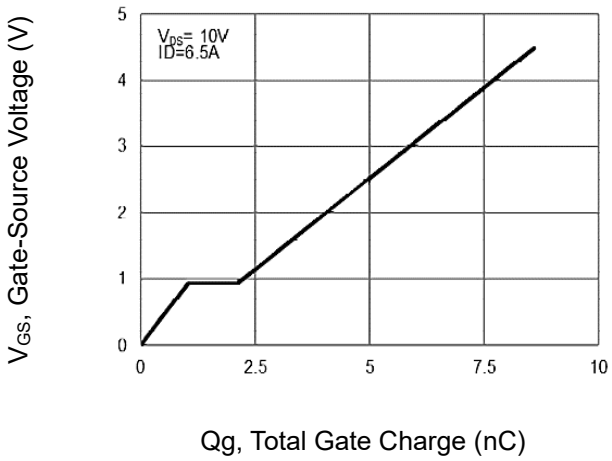

Threshold Voltage Variation with Temperature

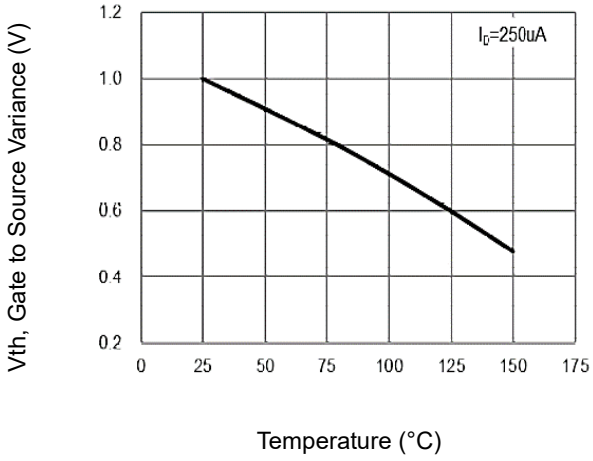

Capacitance vs. Drain-Source Voltage